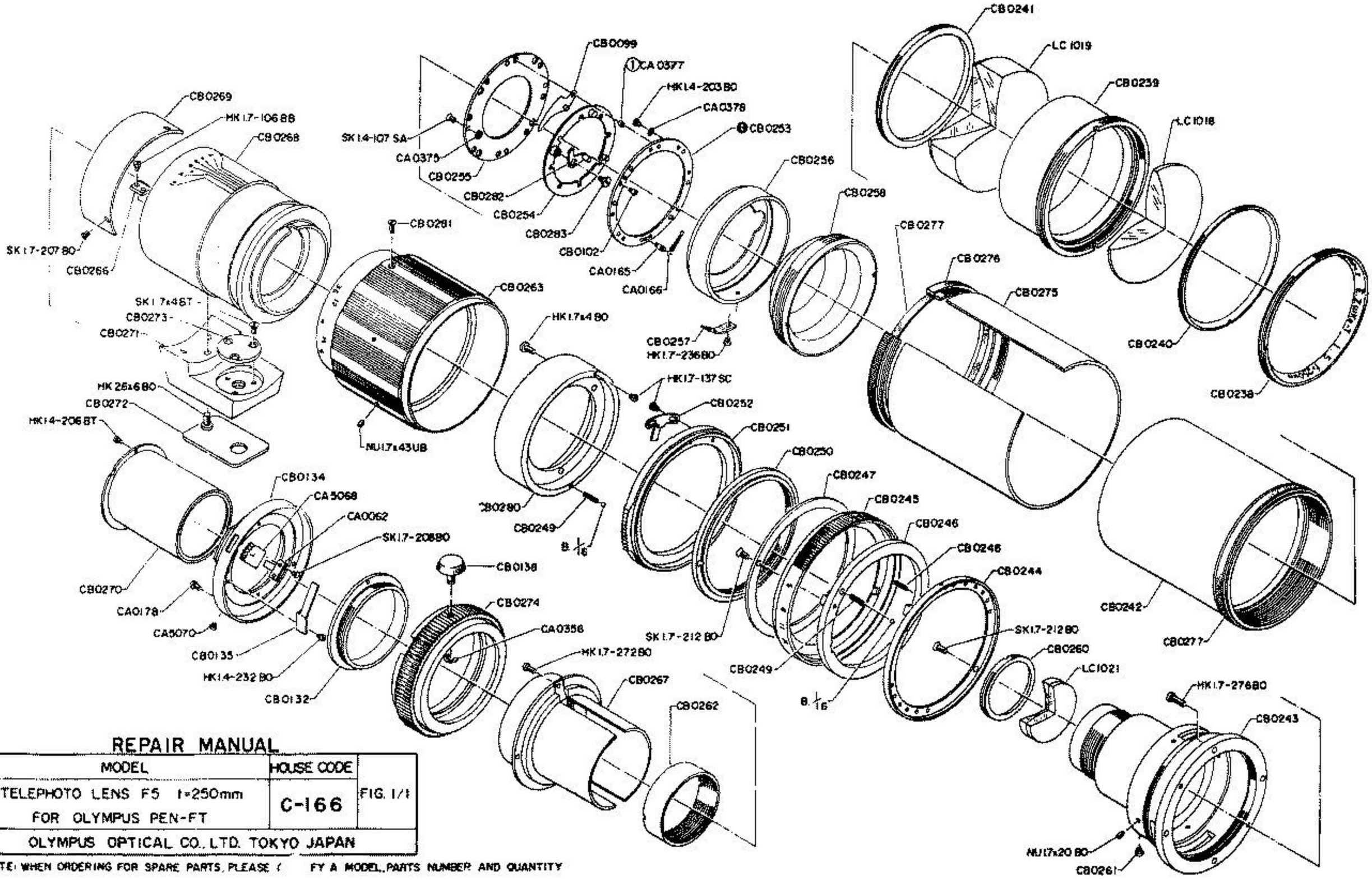

REPAIR MANUAL

MODEL	HOUSE CODE	FIG. 1/1
TELEPHOTO LENS F5 f=250mm FOR OLYMPUS PEN-FT	C-166	
OLYMPUS OPTICAL CO. LTD. TOKYO JAPAN		

NOTE: WHEN ORDERING FOR SPARE PARTS, PLEASE [illegible] FY A MODEL, PARTS NUMBER AND QUANTITY